Rod end DPHSL06 BASIC INNE

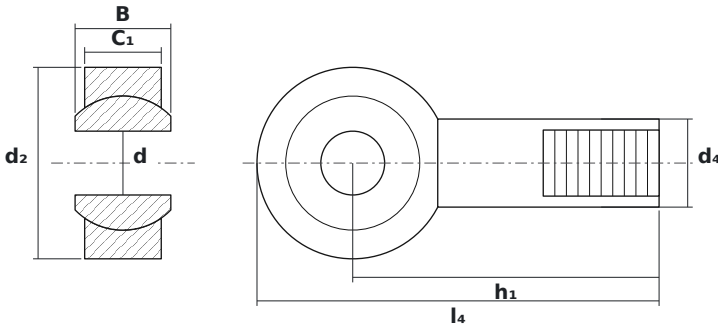

DIMENSIONS

d	bore diameter	**6 mm**
d2	rod end head diameter	**18 mm**
B	ball (inner ring) width	**9 mm**

SPECIFICATIONS

Manufacturer	**INNE**
Manufacturer designation	**DPHSL06 BASIC**
Rolling elements	**plain bearing (no rolling elements)**