Rod end DPOS05 BASIC INNE

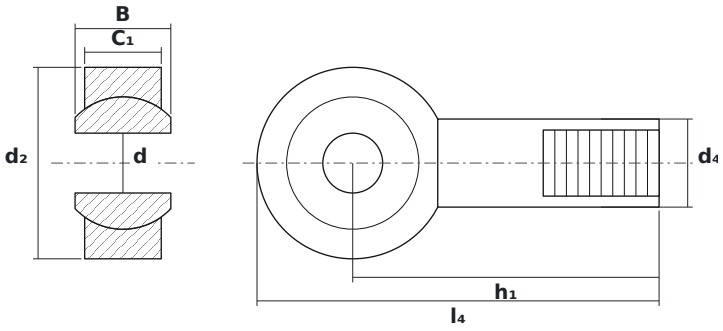

DIMENSIONS

d	bore diameter	**5 mm**
d2	rod end head diameter	**16 mm**
B	ball (inner ring) width	**8 mm**

SPECIFICATIONS

Manufacturer	**INNE**
Manufacturer designation	**DPOS05 BASIC**
Rolling elements	**plain bearing (no rolling elements)**