Rod end DPOSL08 BASIC INNE

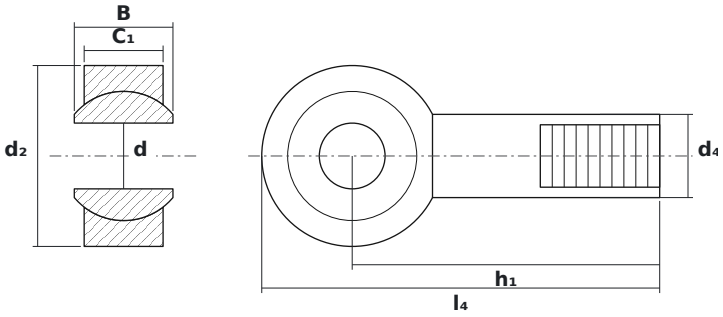

DIMENSIONS

d	bore diameter	**8 mm**
d2	rod end head diameter	**22 mm**
B	ball (inner ring) width	**12 mm**

SPECIFICATIONS

Manufacturer	**INNE**
Manufacturer designation	**DPOSL08 BASIC**
Rolling elements	**plain bearing (no rolling elements)**