Rod end DSA10 E INNE

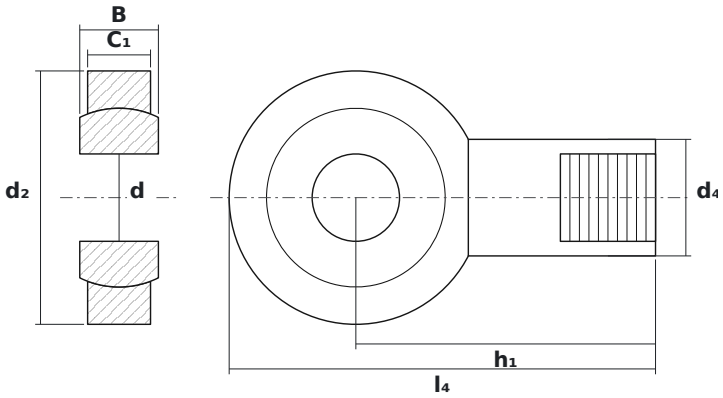

DIMENSIONS

d	bore diameter	**10 mm**
d2	rod end head diameter	**29 mm**
B	ball (inner ring) width	**9 mm**

SPECIFICATIONS

Manufacturer	**INNE**
Manufacturer designation	**DSA10 E**
Rolling elements	**plain bearing (no rolling elements)**
Mass	**0.051 kg**