Rod end DSA18 TK INNE

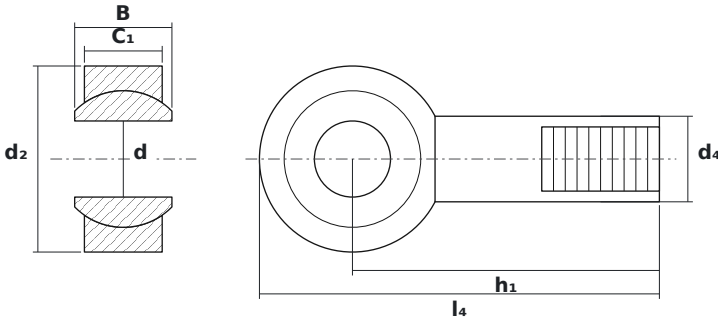

DIMENSIONS

d	bore diameter	**18 mm**
d2	rod end head diameter	**44 mm**
B	ball (inner ring) width	**23 mm**

SPECIFICATIONS

Manufacturer	**INNE**
Manufacturer designation	**DSA18 TK**
Rolling elements	**plain bearing (no rolling elements)**
Mass	**0.28 kg**