Rod end DSAL15 ES2RS INNE

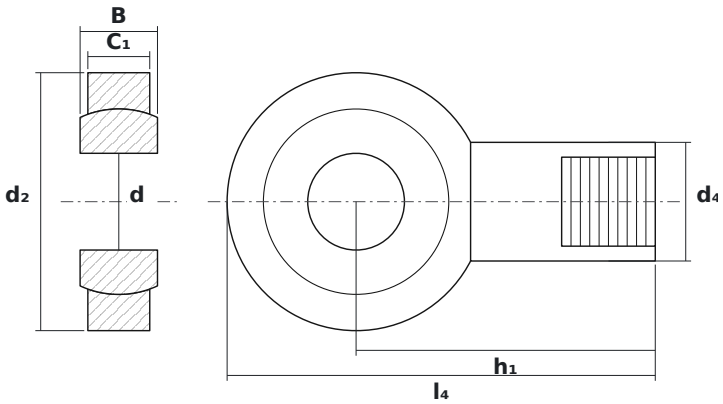

DIMENSIONS

d	bore diameter	**15 mm**
d2	rod end head diameter	**40 mm**
B	ball (inner ring) width	**12 mm**

SPECIFICATIONS

Manufacturer	**INNE**
Manufacturer designation	**DSAL15 ES2RS**
Rolling elements	**plain bearing (no rolling elements)**
Mass	**0.14 kg**