Rod end DSI40 TK INNE

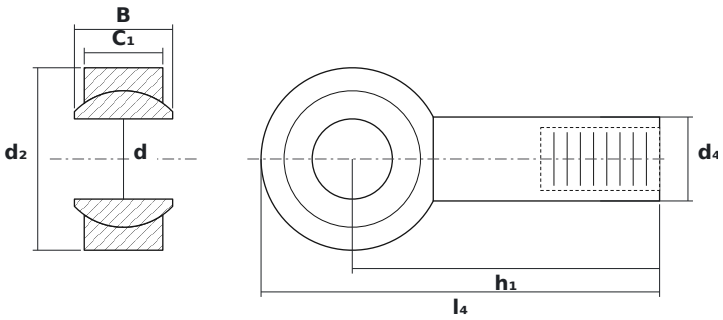

DIMENSIONS

d	bore diameter	**40 mm**
d2	rod end head diameter	**91 mm**
B	ball (inner ring) width	**49 mm**

SPECIFICATIONS

Manufacturer	**INNE**
Manufacturer designation	**DSI40 TK**
Rolling elements	**plain bearing (no rolling elements)**
Mass	**2.4 kg**