Rod end DSI45 ES INNE

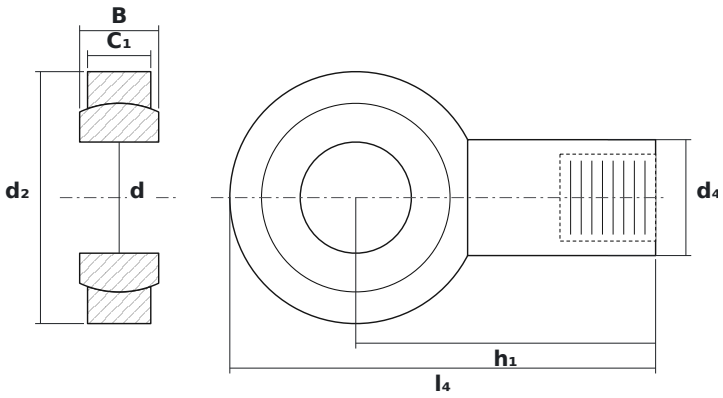

DIMENSIONS

d	bore diameter	**45 mm**
d2	rod end head diameter	**102 mm**
B	ball (inner ring) width	**32 mm**

SPECIFICATIONS

Manufacturer	**INNE**
Manufacturer designation	**DSI45 ES**
Rolling elements	**plain bearing (no rolling elements)**
Mass	**2.5 kg**