Rod end DSI80 ES2RS INNE

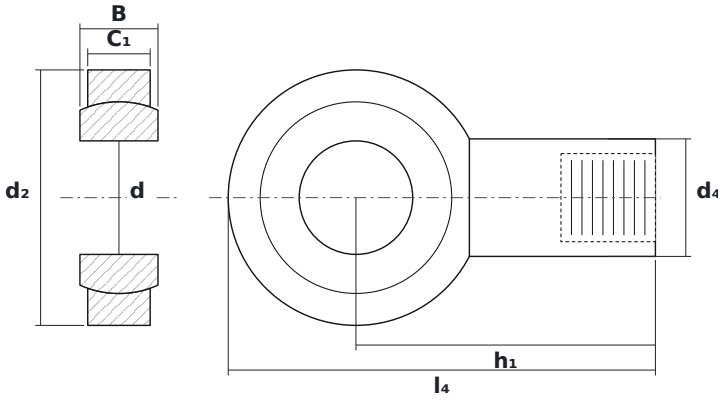

DIMENSIONS

d	bore diameter	**80 mm**
d2	rod end head diameter	**180 mm**
B	ball (inner ring) width	**55 mm**

SPECIFICATIONS

Manufacturer	**INNE**
Manufacturer designation	**DSI80 ES2RS**
Rolling elements	**plain bearing (no rolling elements)**
Mass	**12 kg**