Rod end DSIL40 ES INNE

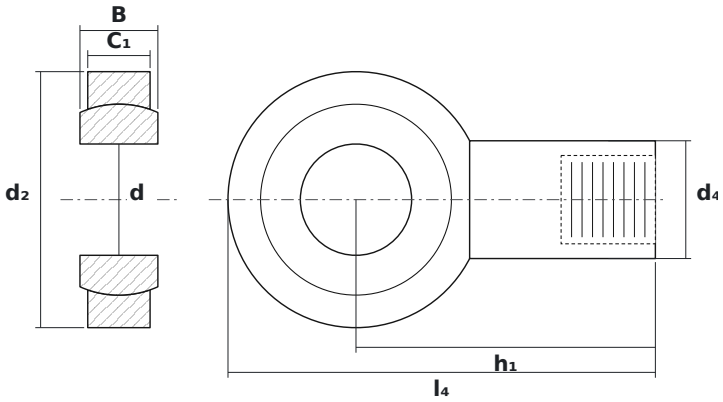

DIMENSIONS

d	bore diameter	**40 mm**
d2	rod end head diameter	**92 mm**
B	ball (inner ring) width	**28 mm**

SPECIFICATIONS

Manufacturer	**INNE**
Manufacturer designation	**DSIL40 ES**
Rolling elements	**plain bearing (no rolling elements)**
Mass	**2 kg**