Rod end DSIL60 ES2RS INNE

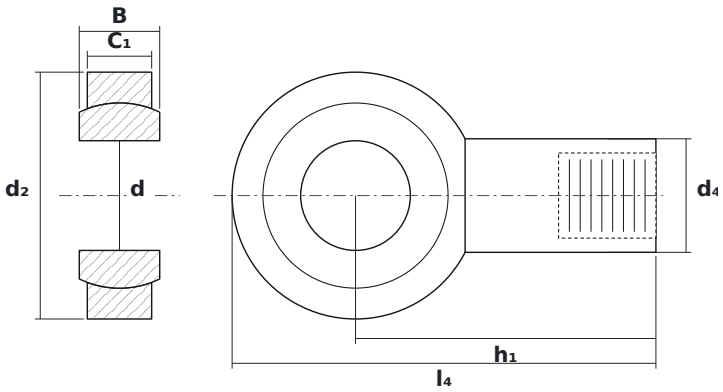

DIMENSIONS

d	bore diameter	**60 mm**
d2	rod end head diameter	**135 mm**
B	ball (inner ring) width	**44 mm**

SPECIFICATIONS

Manufacturer	**INNE**
Manufacturer designation	**DSIL60 ES2RS**
Rolling elements	**plain bearing (no rolling elements)**
Mass	**5.5 kg**