# Rod end EF10-20-502 INNE

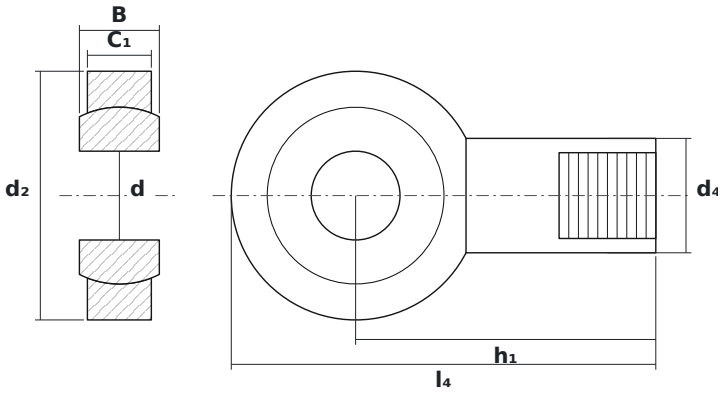


## DIMENSIONS

| | | |
|---|---|---|
| **d** | bore diameter | **10 mm** |
| **d2** | rod end head diameter | **28 mm** |
| **B** | ball (inner ring) width | **9 mm** |

## SPECIFICATIONS

| | |
|---|---|
| Manufacturer | **INNE** |
| Manufacturer designation | **EF10-20-502** |
| Rolling elements | **plain bearing (no rolling elements)** |
| Mass | **0.054 kg** |