Rod end EFN10-20-502 INNE

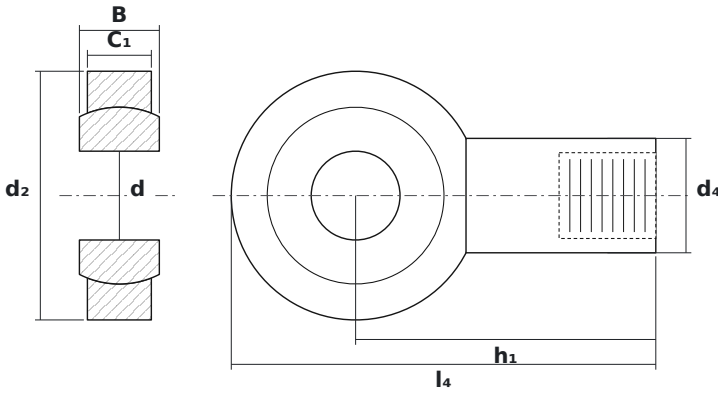

DIMENSIONS

d	bore diameter	**10 mm**
d2	rod end head diameter	**28 mm**
B	ball (inner ring) width	**9 mm**

SPECIFICATIONS

Manufacturer	**INNE**
Manufacturer designation	**EFN10-20-502**
Rolling elements	**plain bearing (no rolling elements)**
Mass	**0.061 kg**