Rod end EFN17-30-501 INNE

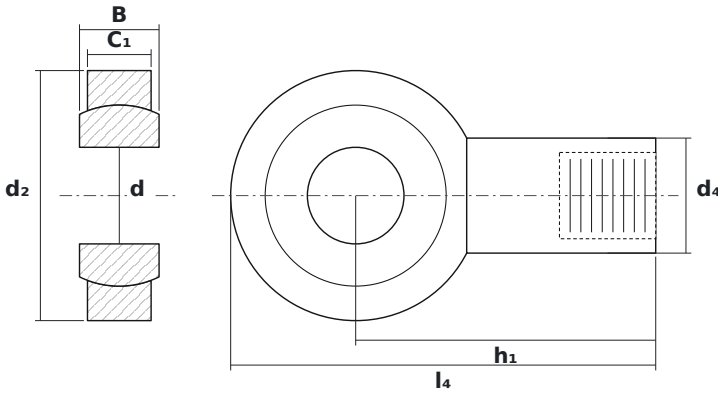

DIMENSIONS

d	bore diameter	**17 mm**
d2	rod end head diameter	**44 mm**
B	ball (inner ring) width	**14 mm**

SPECIFICATIONS

Manufacturer	**INNE**
Manufacturer designation	**EFN17-30-501**
Rolling elements	**plain bearing (no rolling elements)**
Mass	**0.22 kg**