Rod end EM08-20-502 INNE

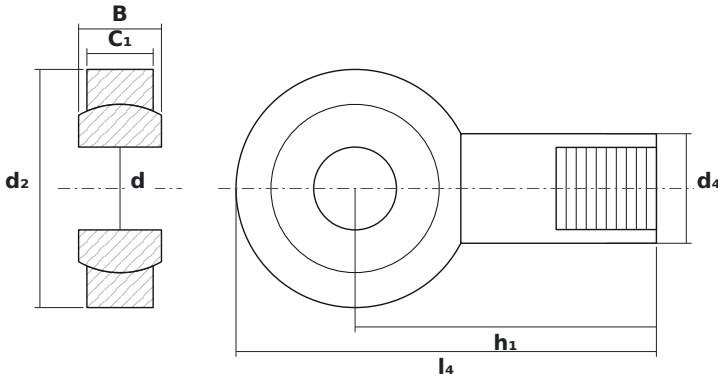

DIMENSIONS

d	bore diameter	**8 mm**
d2	rod end head diameter	**23 mm**
B	ball (inner ring) width	**8 mm**

SPECIFICATIONS

Manufacturer	**INNE**
Manufacturer designation	**EM08-20-502**
Rolling elements	**plain bearing (no rolling elements)**
Mass	**0.024 kg**