Rod end EM17-20-501 Classic Line DURBAL

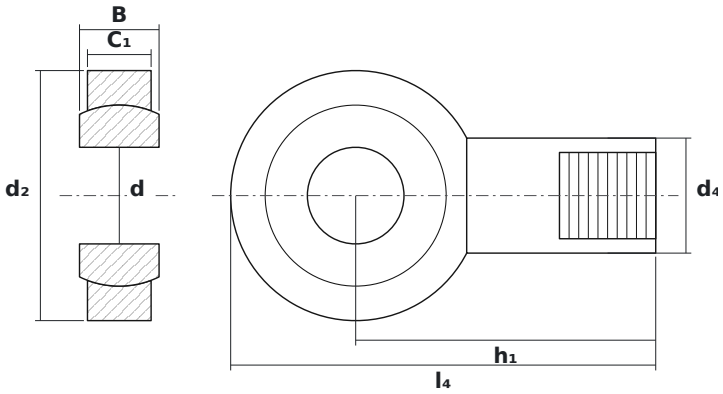

DIMENSIONS

d	bore diameter	**17 mm**
d2	rod end head diameter	**44 mm**
B	ball (inner ring) width	**14 mm**

SPECIFICATIONS

Manufacturer	**DURBAL**
Manufacturer designation	**EM17-20-501 Classic Line**
Rolling elements	**plain bearing (no rolling elements)**