Rod end EMN20-20-502 Classic Line DURBAL

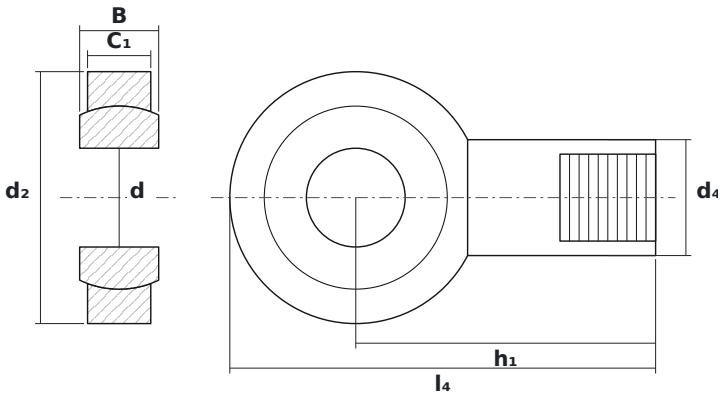

DIMENSIONS

d	bore diameter	**20 mm**
d2	rod end head diameter	**51 mm**
B	ball (inner ring) width	**16 mm**

SPECIFICATIONS

Manufacturer	**DURBAL**
Manufacturer designation	**EMN20-20-502 Classic Line**
Rolling elements	**plain bearing (no rolling elements)**