Rod end GAKR12 PW ZEN

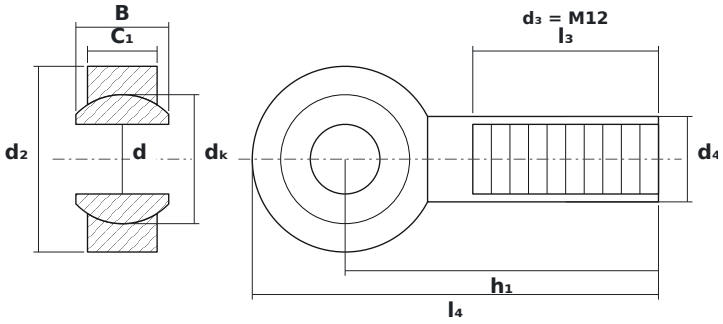

DIMENSIONS

d	bore diameter	**12 mm**
d2	rod end head diameter	**32 mm**
B	ball (inner ring) width	**16 mm**
C1	head (outer ring) width	**12 mm**
dK	ball diameter	**22.23 mm**
h1	ball centre to shank end	**54 mm**
l4	overall length	**70 mm**
l3	thread length	**32 mm**

SPECIFICATIONS

Manufacturer	**ZEN**
Manufacturer designation	**GAKR12 PW**
B – inner ring width	**16 mm**
C – outer ring width	**12 mm**
Thread d_3	**M12**
Rolling elements	**plain bearing (no rolling elements)**
Catalogue designation	**GAKFR12PW**
Basic dynamic load rating C	**24 kN**
Basic static load rating C0	**17 kN**
Mass	**0.085 kg**