Rod end GAL35-DO-2RS ZEN

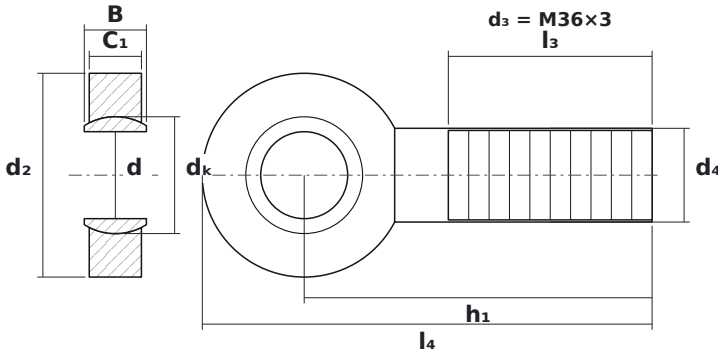

DIMENSIONS

d	bore diameter	**35 mm**
d2	rod end head diameter	**82 mm**
B	ball (inner ring) width	**25 mm**
C1	head (outer ring) width	**21 mm**
dK	ball diameter	**47 mm**
h1	ball centre to shank end	**140 mm**
l4	overall length	**181 mm**
l3	thread length	**82 mm**

SPECIFICATIONS

Manufacturer	**ZEN**
Manufacturer designation	**GAL35-DO-2RS**
B – inner ring width	**25 mm**
C – outer ring width	**21 mm**
Thread d_3	**M36×3**
Rolling elements	**plain bearing (no rolling elements)**
Catalogue designation	**GAR35DO2RS**
Basic dynamic load rating C	**80 kN**
Basic static load rating C0	**146 kN**