Rod end GAL60 DO2RS INA

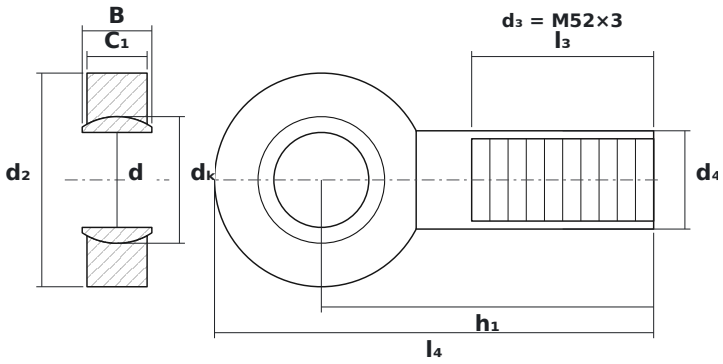

DIMENSIONS

d	bore diameter	**60 mm**
d2	rod end head diameter	**135 mm**
B	ball (inner ring) width	**44 mm**
C1	head (outer ring) width	**38 mm**
dK	ball diameter	**80 mm**
h1	ball centre to shank end	**210 mm**
l4	overall length	**277.5 mm**
l3	thread length	**115 mm**

SPECIFICATIONS

Manufacturer	**INA**
Manufacturer designation	**GAL60 DO2RS**
B – inner ring width	**44 mm**
C – outer ring width	**38 mm**
Thread d_3	**M52×3**
Rolling elements	**plain bearing (no rolling elements)**
Catalogue designation	**GAR60DO2RS**
Basic dynamic load rating C	**245 kN**
Basic static load rating C0	**450 kN**
Mass	**5.9 kg**