Rod end GAR10 UK ZEN

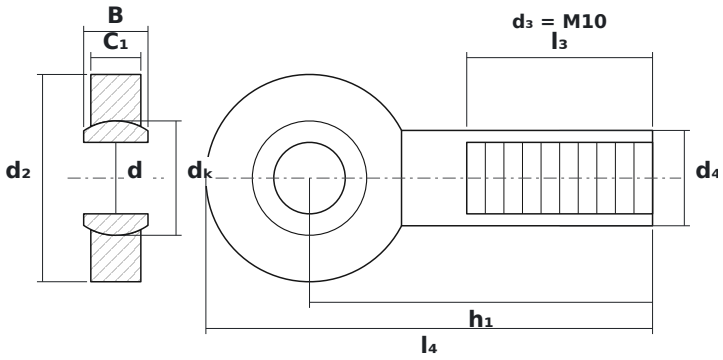

DIMENSIONS

d	bore diameter	**10 mm**
d2	rod end head diameter	**29 mm**
B	ball (inner ring) width	**9 mm**
C1	head (outer ring) width	**7 mm**
dK	ball diameter	**16 mm**
h1	ball centre to shank end	**48 mm**
l4	overall length	**62.5 mm**
l3	thread length	**26 mm**

SPECIFICATIONS

Manufacturer	**ZEN**
Manufacturer designation	**GAR10 UK**
B – inner ring width	**9 mm**
C – outer ring width	**7 mm**
Thread d_3	**M10**
Rolling elements	**plain bearing (no rolling elements)**
Basic dynamic load rating C	**8.65 kN**
Basic static load rating C0	**17.6 kN**
Mass	**0.051 kg**