# Rod end GAR45 DO2RS INA

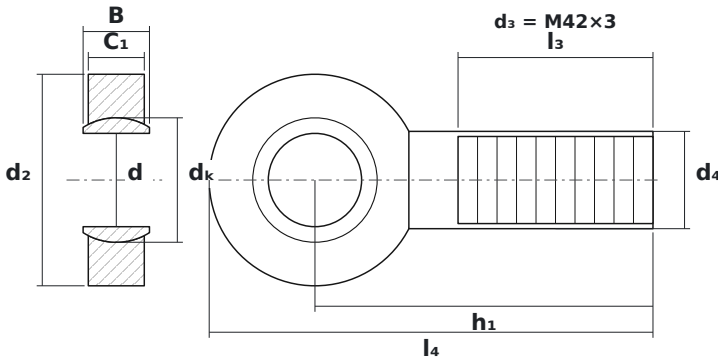


## DIMENSIONS

| | | |
|---|---|---|
| **d** | bore diameter | **45 mm** |
| **d2** | rod end head diameter | **102 mm** |
| **B** | ball (inner ring) width | **32 mm** |
| **C1** | head (outer ring) width | **27 mm** |
| **dK** | ball diameter | **60 mm** |
| **h1** | ball centre to shank end | **163 mm** |
| **l4** | overall length | **214 mm** |
| **l3** | thread length | **94 mm** |

## SPECIFICATIONS

| | |
|---|---|
| Manufacturer | **INA** |
| Manufacturer designation | **GAR45 DO2RS** |
| B – inner ring width | **32 mm** |
| C – outer ring width | **27 mm** |
| Thread $d_3$ | **M42×3** |
| Rolling elements | **plain bearing (no rolling elements)** |
| Basic dynamic load rating C | **127 kN** |
| Basic static load rating C0 | **240 kN** |
| Mass | **2.6 kg** |