Rod end GAR50 DO2RS INA

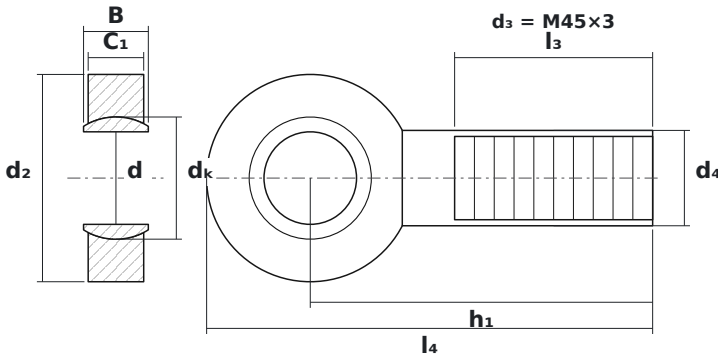

DIMENSIONS

d	bore diameter	**50 mm**
d2	rod end head diameter	**112 mm**
B	ball (inner ring) width	**35 mm**
C1	head (outer ring) width	**30 mm**
dK	ball diameter	**66 mm**
h1	ball centre to shank end	**185 mm**
l4	overall length	**241 mm**
l3	thread length	**107 mm**

SPECIFICATIONS

Manufacturer	**INA**
Manufacturer designation	**GAR50 DO2RS**
B – inner ring width	**35 mm**
C – outer ring width	**30 mm**
Thread d_3	**M45×3**
Rolling elements	**plain bearing (no rolling elements)**
Basic dynamic load rating C	**156 kN**
Basic static load rating C0	**290 kN**