Rod end GF20 DO INA

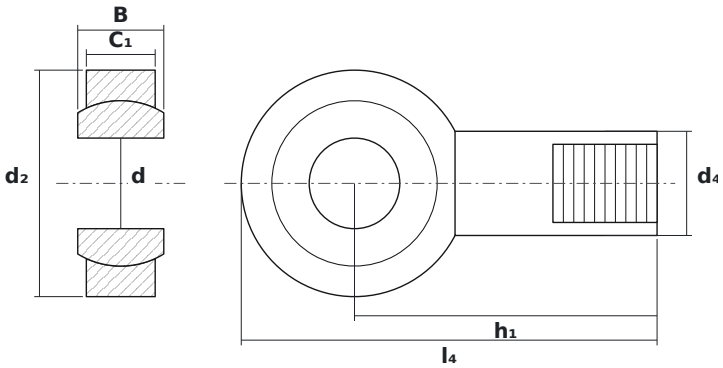

DIMENSIONS

d	bore diameter	**20 mm**
d2	rod end head diameter	**50 mm**
B	ball (inner ring) width	**19 mm**

SPECIFICATIONS

Manufacturer	**INA**
Manufacturer designation	**GF20 DO**
Rolling elements	**plain bearing (no rolling elements)**
Mass	**0.35 kg**