Rod end GF40 DO INA

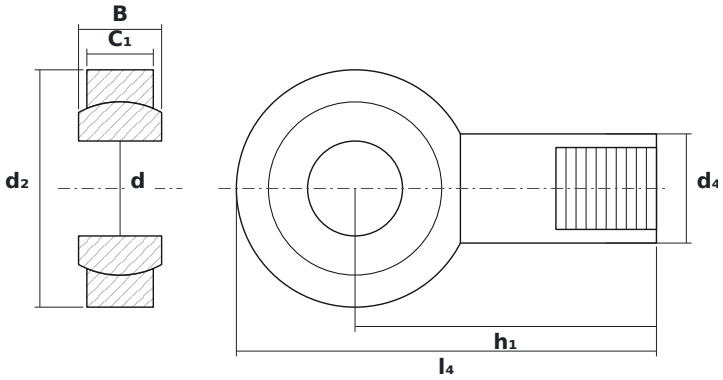

DIMENSIONS

d	bore diameter	**40 mm**
d2	rod end head diameter	**100 mm**
B	ball (inner ring) width	**35 mm**

SPECIFICATIONS

Manufacturer	**INA**
Manufacturer designation	**GF40 DO**
Rolling elements	**plain bearing (no rolling elements)**
Mass	**2.4 kg**