Rod end GF80-DO INA

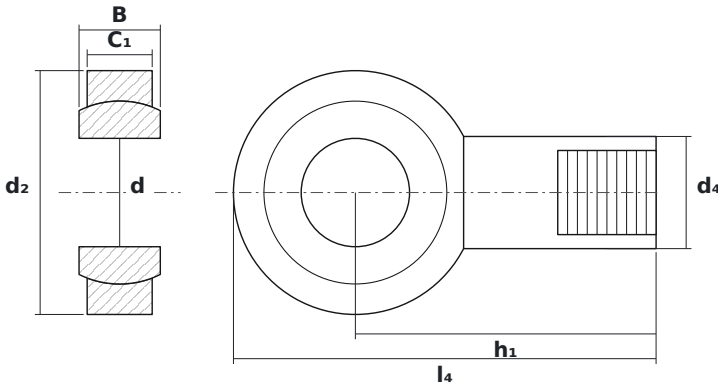

DIMENSIONS

d	bore diameter	**80 mm**
d2	rod end head diameter	**180 mm**
B	ball (inner ring) width	**60 mm**

SPECIFICATIONS

Manufacturer	**INA**
Manufacturer designation	**GF80-DO**
Rolling elements	**plain bearing (no rolling elements)**