Rod end GIHRK30 DO ZEN

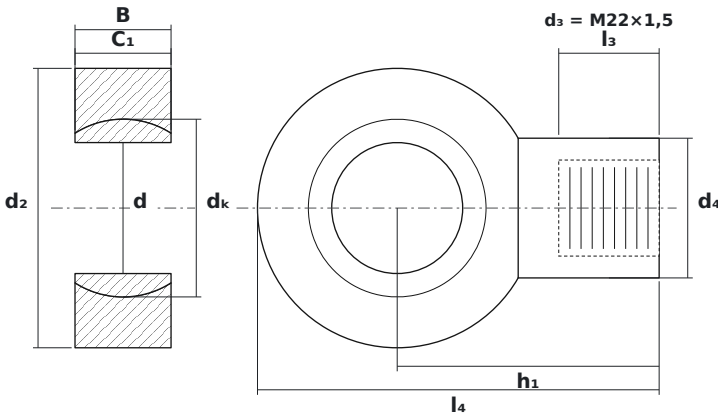

DIMENSIONS

d	bore diameter	**30 mm**
d2	rod end head diameter	**64 mm**
B	ball (inner ring) width	**22 mm**
C1	head (outer ring) width	**28 mm**
dK	ball diameter	**40.7 mm**
h1	ball centre to shank end	**60 mm**
l4	overall length	**92 mm**
d4	shank diameter	**32 mm**
l3	thread length	**23 mm**

SPECIFICATIONS

Manufacturer	**ZEN**
Manufacturer designation	**GIHRK30 DO**
B – inner ring width	**22 mm**
C – outer ring width	**28 mm**
Thread d_3	**M22×1,5**
Rolling elements	**plain bearing (no rolling elements)**
Catalogue designation	**GIHR30DO**
Basic dynamic load rating C	**62 kN**
Basic static load rating C0	**106 kN**
Mass	**0.74 kg**