Rod end GIHRK40-UK-2RS ZEN

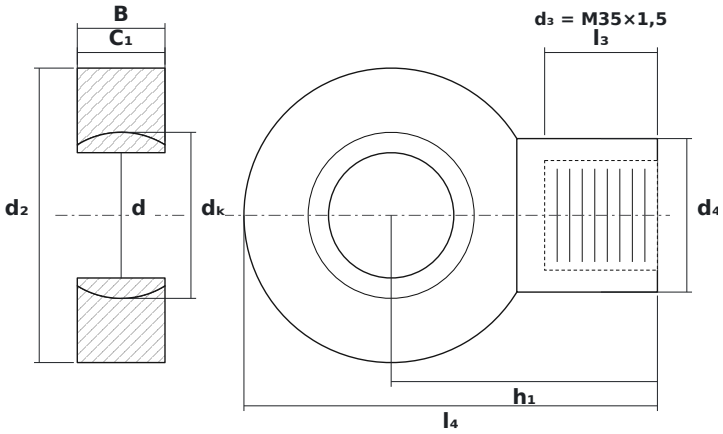

DIMENSIONS

d	bore diameter	**40 mm**
d2	rod end head diameter	**94 mm**
B	ball (inner ring) width	**28 mm**
C1	head (outer ring) width	**35 mm**
dK	ball diameter	**53 mm**
h1	ball centre to shank end	**85 mm**
l4	overall length	**132 mm**
d4	shank diameter	**49 mm**
l3	thread length	**36 mm**

SPECIFICATIONS

Manufacturer	**ZEN**
Manufacturer designation	**GIHRK40-UK-2RS**
B – inner ring width	**28 mm**
C – outer ring width	**35 mm**
Thread d_3	**M35×1,5**
Rolling elements	**plain bearing (no rolling elements)**
Catalogue designation	**GIHR40DO**
Basic dynamic load rating C	**100 kN**
Basic static load rating C0	**250 kN**