Rod end GIKPR16 PW ZEN

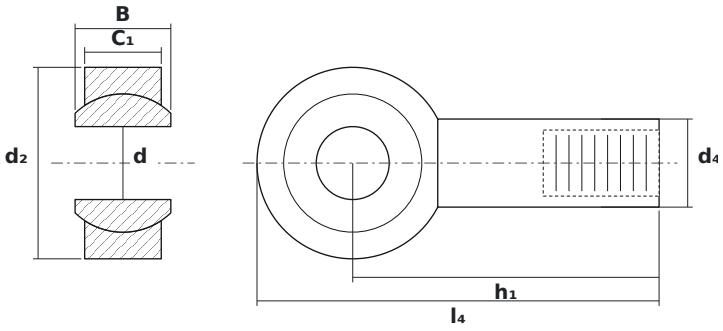

DIMENSIONS

d	bore diameter	**16 mm**
d2	rod end head diameter	**42 mm**
B	ball (inner ring) width	**21 mm**

SPECIFICATIONS

Manufacturer	**ZEN**
Manufacturer designation	**GIKPR16 PW**
Rolling elements	**plain bearing (no rolling elements)**