Rod end GK10 DO ZEN

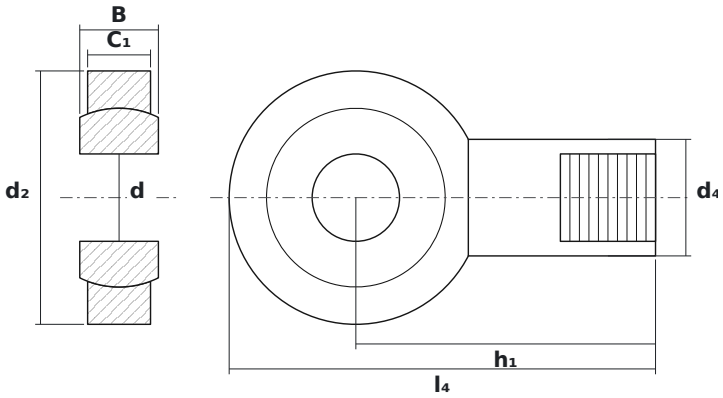

DIMENSIONS

d	bore diameter	**10 mm**
d2	rod end head diameter	**29 mm**
B	ball (inner ring) width	**9 mm**

SPECIFICATIONS

Manufacturer	**ZEN**
Manufacturer designation	**GK10 DO**
Rolling elements	**plain bearing (no rolling elements)**
Mass	**0.041 kg**