Rod end GK35 DO INA

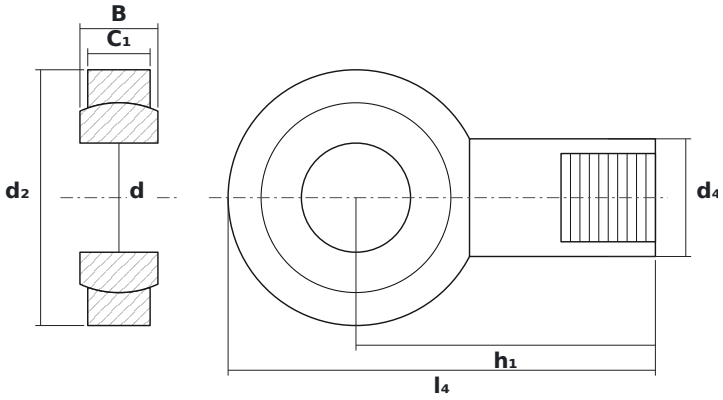

DIMENSIONS

d	bore diameter	**35 mm**
d2	rod end head diameter	**82 mm**
B	ball (inner ring) width	**25 mm**

SPECIFICATIONS

Manufacturer	**INA**
Manufacturer designation	**GK35 DO**
Rolling elements	**plain bearing (no rolling elements)**
Mass	**0.96 kg**