Rod end GK60 DO ZEN

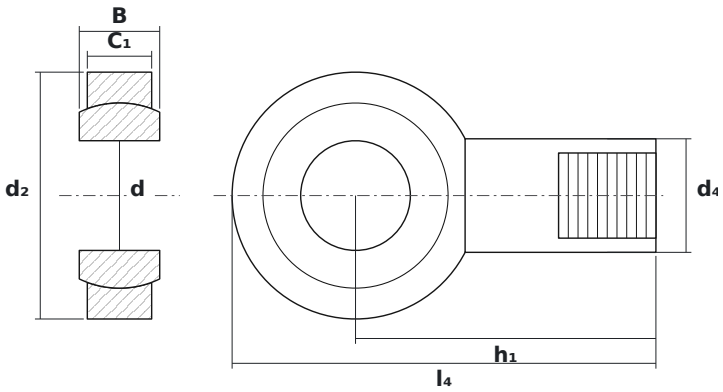

DIMENSIONS

d	bore diameter	**60 mm**
d2	rod end head diameter	**135 mm**
B	ball (inner ring) width	**44 mm**

SPECIFICATIONS

Manufacturer	**ZEN**
Manufacturer designation	**GK60 DO**
Rolling elements	**plain bearing (no rolling elements)**
Mass	**4.67 kg**