Rod end GK70 DO INA

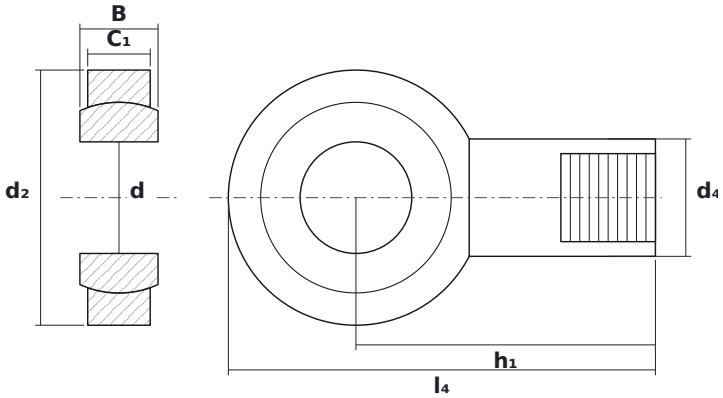

DIMENSIONS

d	bore diameter	**70 mm**
d2	rod end head diameter	**160 mm**
B	ball (inner ring) width	**49 mm**

SPECIFICATIONS

Manufacturer	**INA**
Manufacturer designation	**GK70 DO**
Rolling elements	**plain bearing (no rolling elements)**