# Spherical roller bearing 20205 TC3 FAG

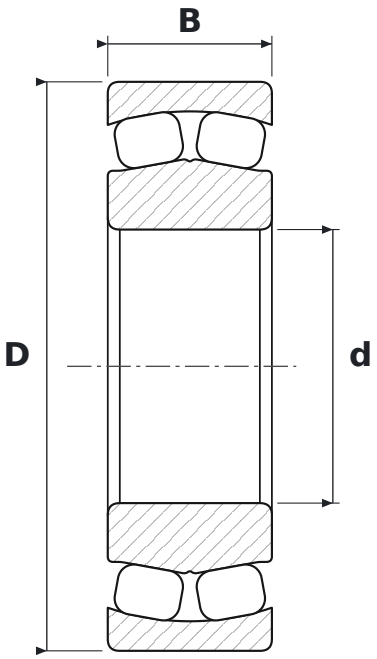


## DIMENSIONS

| | | |
|---|---|---|
| **d** | bore diameter | **25 mm** |
| **D** | outside diameter | **52 mm** |
| **B** | width | **15 mm** |

## SPECIFICATIONS

| | |
|---|---|
| Manufacturer | **FAG** |
| Manufacturer designation | **20205 TC3** |
| Rolling elements | **single-row spherical roller bearing** |
| C3 | **radial clearance greater than normal** |
| Seal | **open – no seals** |
| Mass | **0.145 kg** |