Spherical roller bearing 20209 TC3 FAG

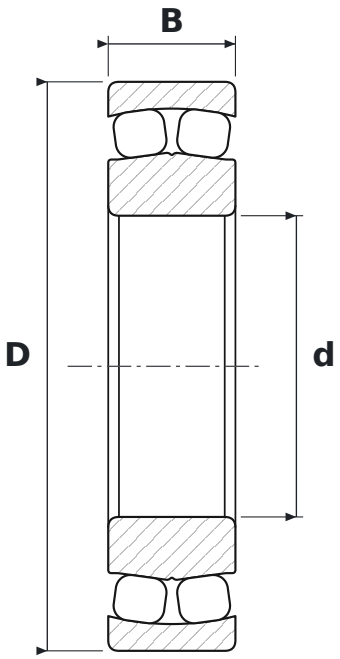

DIMENSIONS

d	bore diameter	**45 mm**
D	outside diameter	**85 mm**
B	width	**19 mm**

SPECIFICATIONS

Manufacturer	**FAG**
Manufacturer designation	**20209 TC3**
Rolling elements	**single-row spherical roller bearing**
C3	**radial clearance greater than normal**
Seal	**open – no seals**
Mass	**0.496 kg**