Spherical roller bearing 20212-T FAG

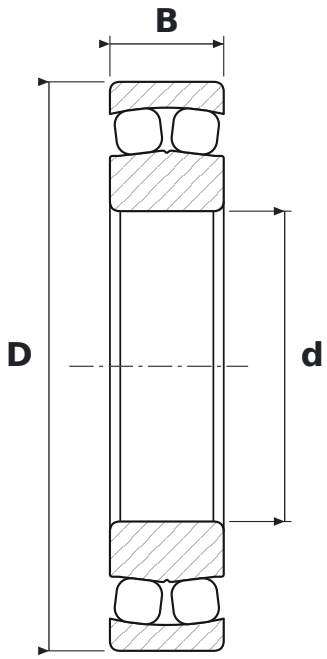

DIMENSIONS

d	bore diameter	**60 mm**
D	outside diameter	**110 mm**
B	width	**22 mm**

SPECIFICATIONS

Manufacturer	**FAG**
Manufacturer designation	**20212-T**
Rolling elements	**single-row spherical roller bearing**
T	**manufacturer design code**
Seal	**open – no seals**
Radial internal clearance	**CN – normal**
Cage	**Hard fabric window cage**
Mass	**0.805 kg**