Spherical roller bearing 20212 TC3 FAG

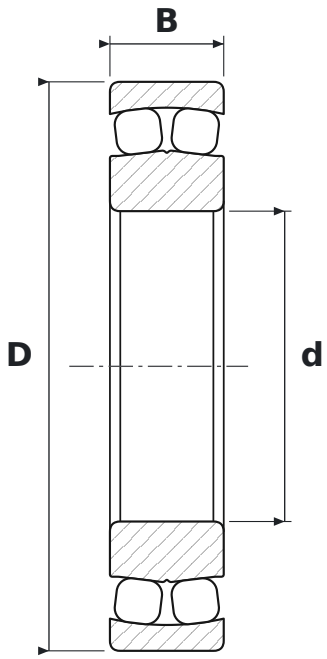

DIMENSIONS

d	bore diameter	**60 mm**
D	outside diameter	**110 mm**
B	width	**22 mm**

SPECIFICATIONS

Manufacturer	**FAG**
Manufacturer designation	**20212 TC3**
Rolling elements	**single-row spherical roller bearing**
C3	**radial clearance greater than normal**
Seal	**open – no seals**
Mass	**0.805 kg**