Spherical roller bearing 20213-T FAG

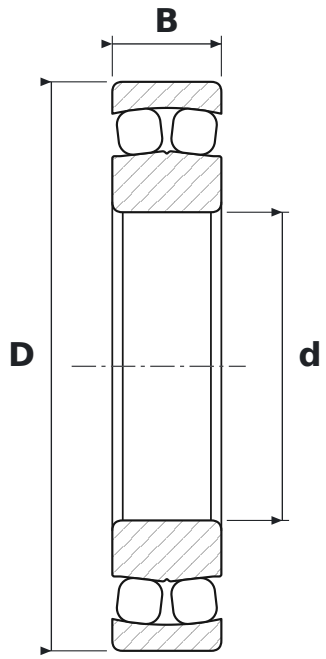

DIMENSIONS

d	bore diameter	**65 mm**
D	outside diameter	**120 mm**
B	width	**23 mm**

SPECIFICATIONS

Manufacturer	**FAG**
Manufacturer designation	**20213-T**
Rolling elements	**single-row spherical roller bearing**
T	**manufacturer design code**
Seal	**open – no seals**
Radial internal clearance	**CN – normal**
Cage	**Hard fabric window cage**
Mass	**1.11 kg**