Spherical roller bearing 20216 K.TC3 FAG

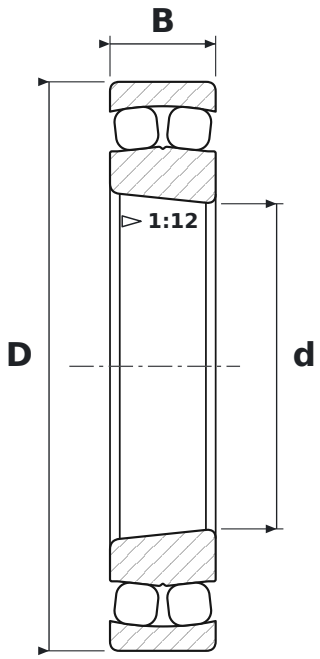

DIMENSIONS

d	bore diameter	**80 mm**
D	outside diameter	**140 mm**
B	width	**26 mm**

SPECIFICATIONS

Manufacturer	**FAG**
Manufacturer designation	**20216 K.TC3**
Rolling elements	**single-row spherical roller bearing**
K	**tapered bore, taper 1:12**
C3	**radial clearance greater than normal**
Seal	**open – no seals**
Mass	**1.72 kg**