Spherical roller bearing 20217-K-MB-C3 FAG

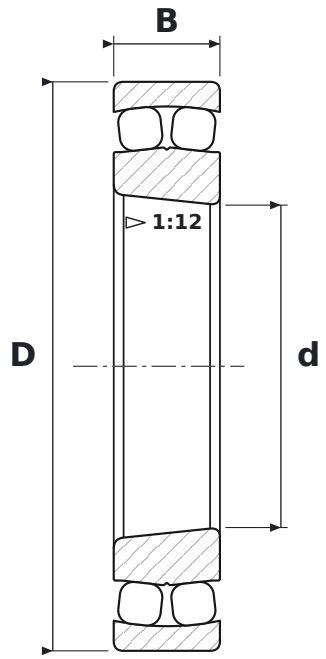

DIMENSIONS

d	bore diameter	**85 mm**
D	outside diameter	**150 mm**
B	width	**28 mm**

WHAT 20217-K-MB-C3 MEANS

K	tapered bore, taper 1:12
MB	machined brass cage, inner ring centred
C3	radial clearance greater than normal

SPECIFICATIONS

Manufacturer	**FAG**
Manufacturer designation	**20217-K-MB-C3**
Rolling elements	**single-row spherical roller bearing**
Mass	**2.14 kg**