Spherical roller bearing 20218-K-MB FAG

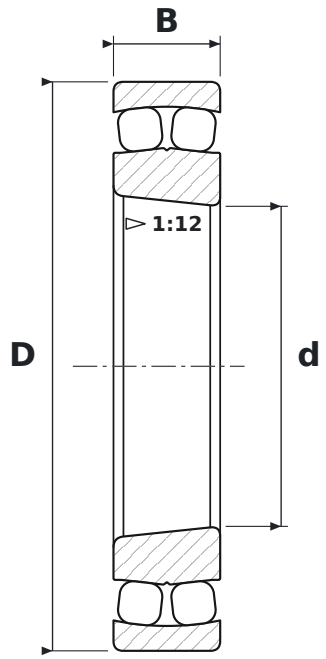

DIMENSIONS

d	bore diameter	**90 mm**
D	outside diameter	**160 mm**
B	width	**30 mm**

WHAT 20218-K-MB MEANS

K	tapered bore, taper 1:12
MB	machined brass cage, inner ring centred

SPECIFICATIONS

Manufacturer	**FAG**
Manufacturer designation	**20218-K-MB**
Rolling elements	**single-row spherical roller bearing**