Spherical roller bearing 20218-MB-C3 FAG

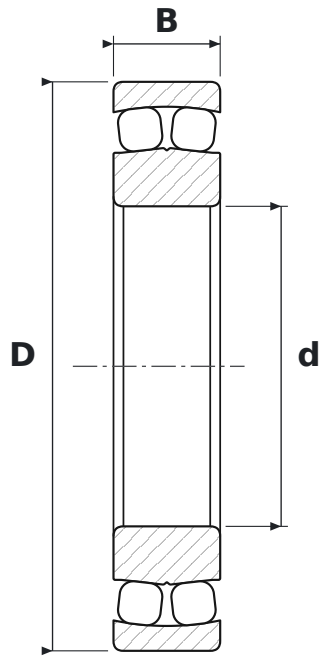

DIMENSIONS

d	bore diameter	**90 mm**
D	outside diameter	**160 mm**
B	width	**30 mm**

WHAT 20218-MB-C3 MEANS

MB	machined brass cage, inner ring centred
C3	radial clearance greater than normal

SPECIFICATIONS

Manufacturer	**FAG**
Manufacturer designation	**20218-MB-C3**
Rolling elements	**single-row spherical roller bearing**
Mass	**2.765 kg**