# Spherical roller bearing 21317-E1-XL-K-TVPB-C3 FAG

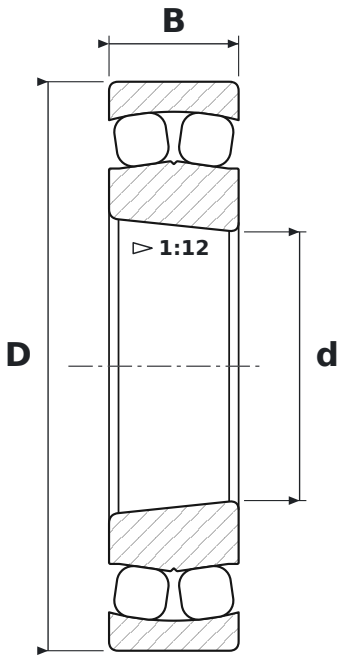


## DIMENSIONS

| | | |
|---|---|---|
| **d** | bore diameter | **85 mm** |
| **D** | outside diameter | **180 mm** |
| **B** | width | **41 mm** |

## WHAT 21317-E1-XL-K-TVPB-C3 MEANS

| | |
|---|---|
| **E1** | reinforced design E1 (FAG) |
| **XL** | jakość X-life – mniejsza chropowatość i większa dokładność geometryczna bieżni, wyższa nośność i trwałość |
| **K** | tapered bore, taper 1:12 |
| **TVPB** | polyamide window cage, ball centred (FAG) |
| **C3** | radial clearance greater than normal |

## SPECIFICATIONS

| | |
|---|---|
| Manufacturer | **FAG** |
| Manufacturer designation | **21317-E1-XL-K-TVPB-C3** |
| Rolling elements | **double-row spherical roller bearing** |
| Mass | **4.93 kg** |