Spherical roller bearing 21317 KEJW33 TIMKEN

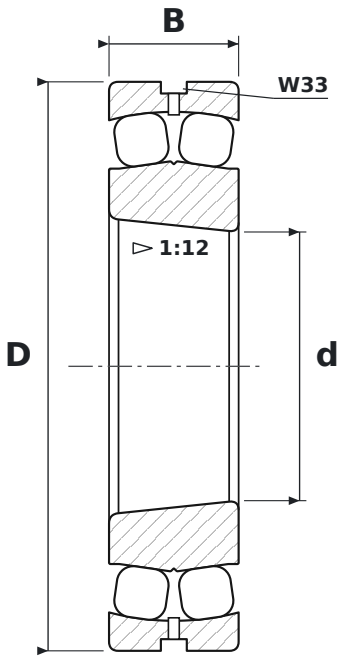

DIMENSIONS

d	bore diameter	**85 mm**
D	outside diameter	**180 mm**
B	width	**41 mm**

WHAT 21317 KEJW33 MEANS

K	tapered bore, taper 1:12
EJ	pressed steel cage (Timken)
W33	lubrication groove and holes in the outer ring

SPECIFICATIONS

Manufacturer	**TIMKEN**
Manufacturer designation	**21317 KEJW33**
Rolling elements	**double-row spherical roller bearing**