CASTOMER

DATASHEET

# Spherical roller bearing 22210 EAW33ZZ SNR

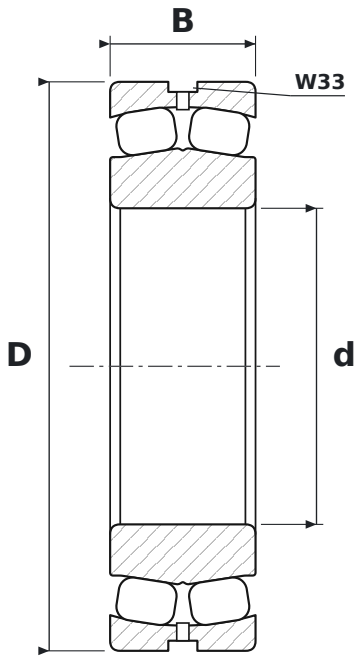


## DIMENSIONS

| | | |
|---|---|---|
| **d** | bore diameter | **50 mm** |
| **D** | outside diameter | **90 mm** |
| **B** | width | **23 mm** |

## WHAT 22210 EAW33ZZ MEANS

| | |
|---|---|
| **EA** | pressed steel cage, high-capacity design (NSK) |
| **W33** | lubrication groove and holes in the outer ring |
| **ZZ** | blaszki ochronne, dwustronne |

## SPECIFICATIONS

| | |
|---|---|
| Manufacturer | **SNR** |
| Manufacturer designation | **22210 EAW33ZZ** |
| Rolling elements | **double-row spherical roller bearing** |