CASTOMER

DATASHEET

Spherical roller bearing 22210 EAKW33ZZ SNR

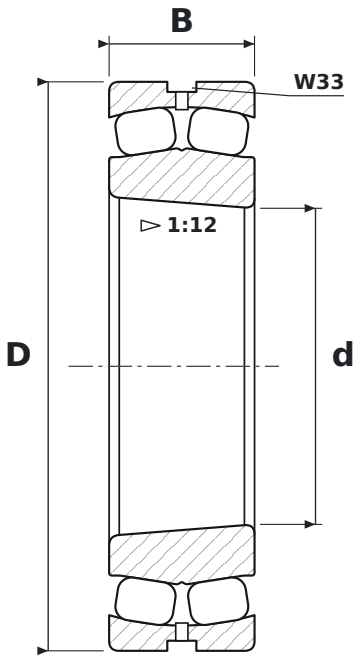

DIMENSIONS

d	bore diameter	**50 mm**
D	outside diameter	**90 mm**
B	width	**23 mm**

WHAT 22210 EAKW33ZZ MEANS

EA	pressed steel cage, high-capacity design (NSK)
K	tapered bore, taper 1:12
W33	lubrication groove and holes in the outer ring
ZZ	blaszki ochronne, dwustronne

SPECIFICATIONS

Manufacturer	**SNR**
Manufacturer designation	**22210 EAKW33ZZ**
Rolling elements	**double-row spherical roller bearing**