CASTOMER

DATASHEET

Spherical roller bearing 22212 EAKE4C3 NSK

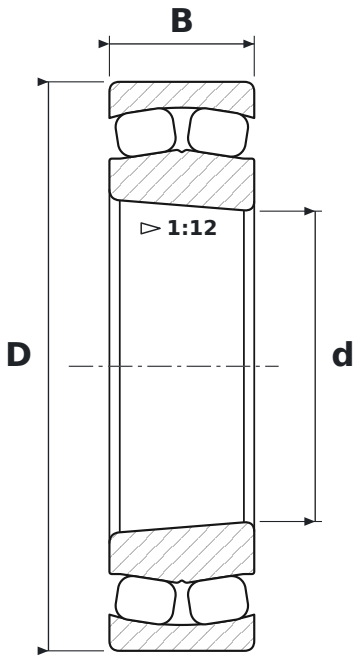

DIMENSIONS

d	bore diameter	**60 mm**
D	outside diameter	**110 mm**
B	width	**28 mm**

WHAT 22212 EAKE4C3 MEANS

EA	pressed steel cage, high-capacity design (NSK)
K	tapered bore, taper 1:12
E4	rowek i otwory smarowe w pierścieniu zewnętrznym
C3	radial clearance greater than normal

SPECIFICATIONS

Manufacturer	**NSK**
Manufacturer designation	**22212 EAKE4C3**
Rolling elements	**double-row spherical roller bearing**