Spherical roller bearing 22212 K.EAW33ZZC3 SNR

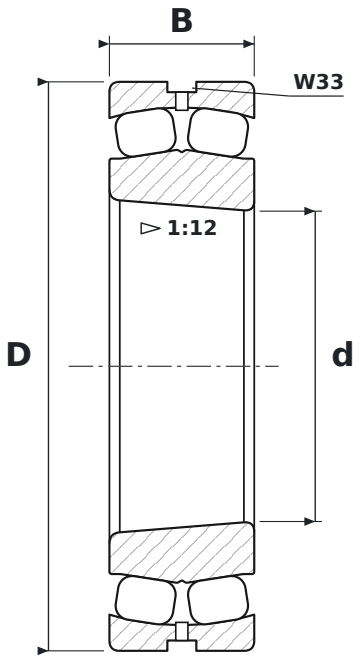

DIMENSIONS

d	bore diameter	**60 mm**
D	outside diameter	**110 mm**
B	width	**28 mm**

WHAT 22212 K.EAW33ZZC3 MEANS

K	tapered bore, taper 1:12
EA	pressed steel cage, high-capacity design (NSK)
W33	lubrication groove and holes in the outer ring
ZZ	blaszki ochronne, dwustronne
C3	radial clearance greater than normal

SPECIFICATIONS

Manufacturer	**SNR**
Manufacturer designation	**22212 K.EAW33ZZC3**
Rolling elements	**double-row spherical roller bearing**