Spherical roller bearing 22212 RZKW33 KOYO

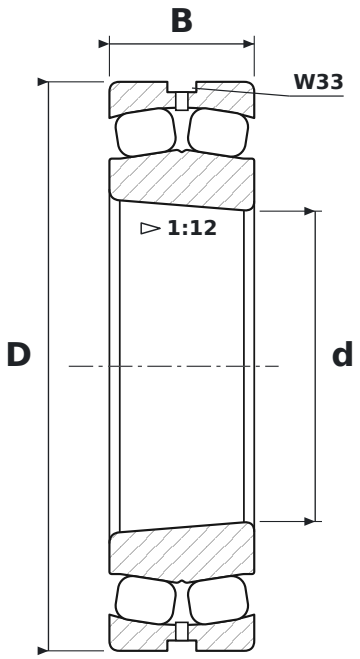

DIMENSIONS

d	bore diameter	**60 mm**
D	outside diameter	**110 mm**
B	width	**28 mm**

WHAT 22212 RZKW33 MEANS

RZ	baryłki symetryczne, koszyk tłoczony
K	tapered bore, taper 1:12
W33	lubrication groove and holes in the outer ring

SPECIFICATIONS

Manufacturer	**KOYO**
Manufacturer designation	**22212 RZKW33**
Rolling elements	**double-row spherical roller bearing**