CASTOMER

DATASHEET

Spherical roller bearing 22212 RZW33C3 KOYO

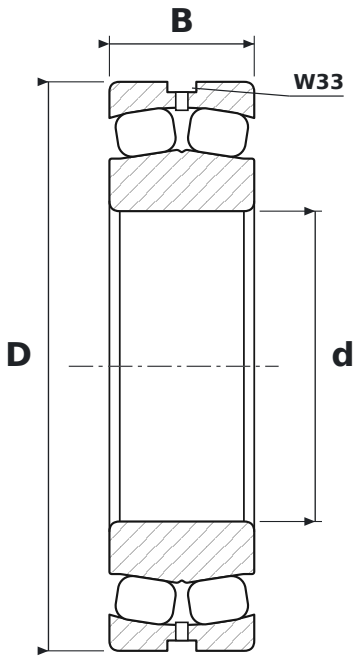

DIMENSIONS

d	bore diameter	**60 mm**
D	outside diameter	**110 mm**
B	width	**28 mm**

WHAT 22212 RZW33C3 MEANS

RZ	baryłki symetryczne, koszyk tłoczony
W33	lubrication groove and holes in the outer ring
C3	radial clearance greater than normal

SPECIFICATIONS

Manufacturer	**KOYO**
Manufacturer designation	**22212 RZW33C3**
Rolling elements	**double-row spherical roller bearing**